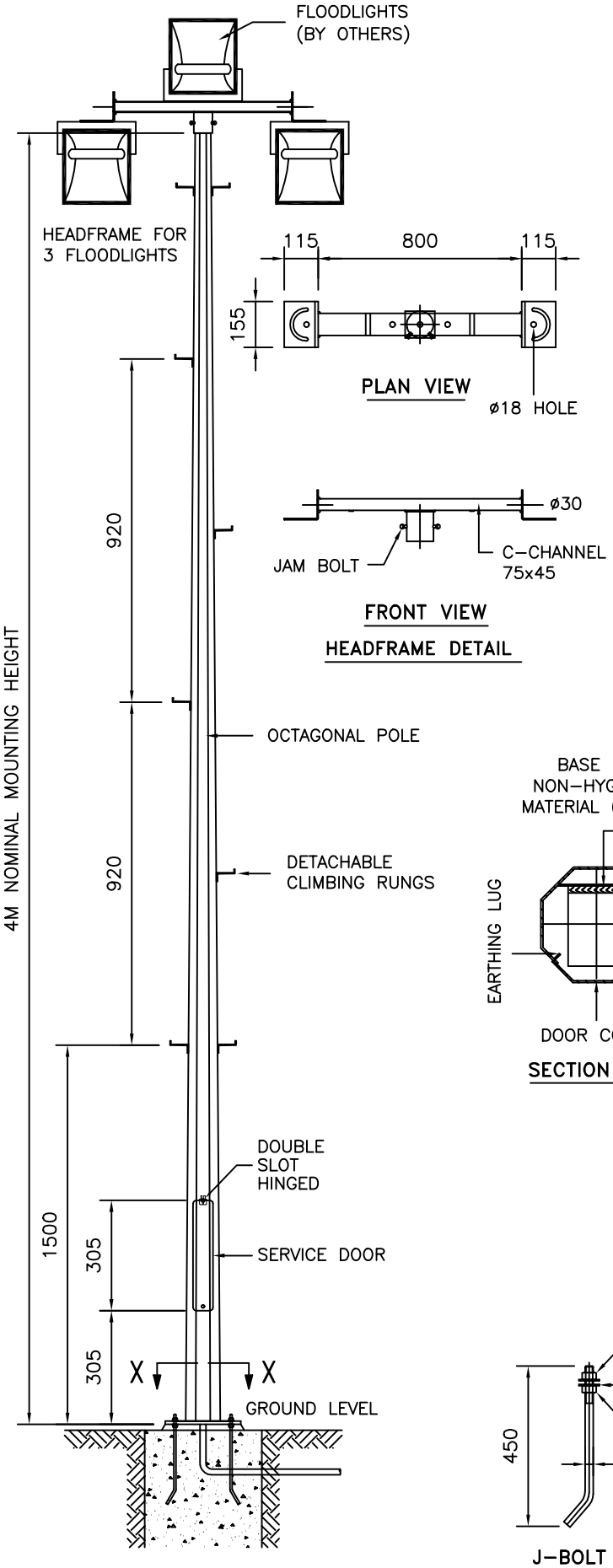

TECHNICAL SPECIFICATIONS

- GPA COLUMNS, POLES AND MASTS ARE SPECIFICALLY DESIGNED AND ENGINEERED FOR THE VARIOUS AUSTRALIAN WIND SPEED, TERRAIN AND TOPOGRAPHIC CONDITIONS.
- GPA COLUMNS, POLES AND MASTS ARE MANUFACTURED IN COMPLIANCE TO AUSTRALIAN STANDARD AS/NZS 1170
- MATERIALS USED FOR LIGHTING COLUMNS ARE IN COMPILANCE TO AS/NZS 4600.
- LIGHTING COLUMNS ARE LONGITUDINALLY SEAM WELDED CONFORM TO AUSTRALIAN STANDARDS BY AUTOMATIC CONTINUOUS METAL INERT GAS (MIG) PROCESS.
- COLUMNS ARE ANTI-CORRODED BY HOT-DIP GALVANISED, COMPLIANCE TO GALVANIZING STANDARD AS4680
- SERVICE DOOR DIMENSIONS ARE GIVEN AS A GUIDE ONLY. THE ENGINEER MUST SATISFY HIMSELF THAT DIMENSIONS GIVEN ARE ADEQUATE FOR THE INSTALLATION OF THE REQUIRED CONTROL GEAR.
- ALL DIMENSIONS ARE IN (mm), UNLESS OTHERWISE SPECIFIED.

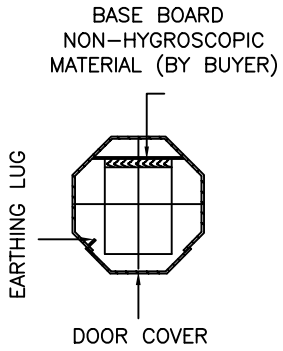

SECTION A–A

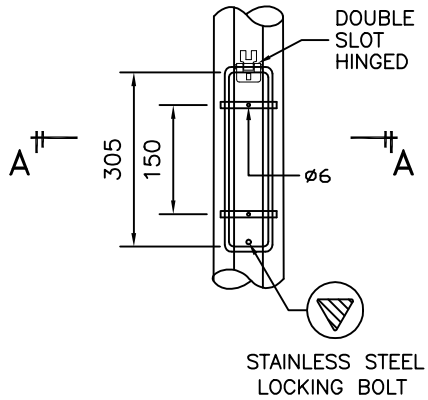

SERVICE DOOR DETAIL

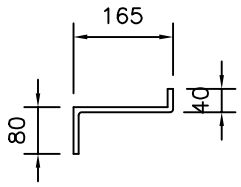

CLIMBING RUNGS DETAIL

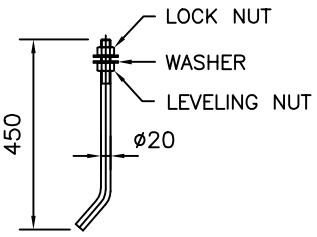

J–BOLT

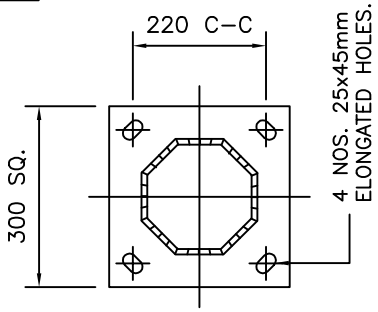

SECTION X–X

GALVANISED POLES
AUSTRALIA

45 Briggs Street, Welshpool,
Western Australia 6106
P: 1300 790 343
E: sales@galvanisedpolesaustralia.com
www.galvanisedpolesaustralia.com

CLIENT : –		DRAW NO : 4M/FLC CR/HF–3/FM/R0	
PROJECT : –		FILE NAME : FLC STD ISO	
DATE : 17–03–2010	DRAWN BY : D.C.	CHECKED BY : D.C.	SCALE : N.T.S
DRAWING TITLE : 4M FLOODLIGHT COLUMN HF-3 CLIMBING RUNG TYPE FM		APPROVED BY : D.C.	A4 SIZE

THIS DRAWING IS THE PROPERTY OF GALVANISED POLES AUSTRALIA AND MUST NOT BE REPRODUCED WITHOUT THEIR PRIOR CONSENT IN WRITING.